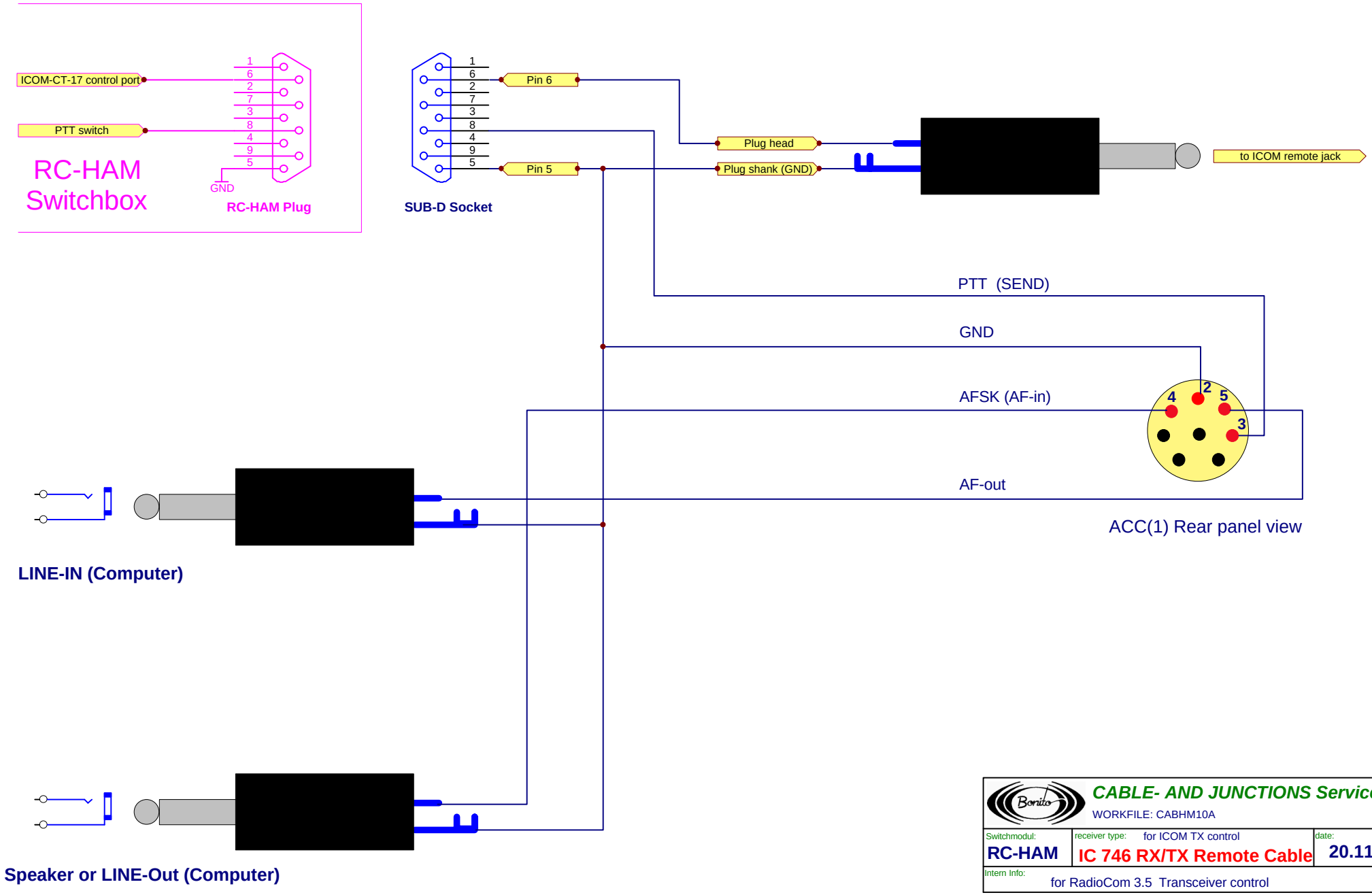

CABLE- AND JUNCTIONS Service

WORKFILE: CABHM10A

Switchmodul:	receiver type: for ICOM TX control	date:
RC-HAM	**IC 746 RX/TX Remote Cable**	**20.11.98**

Intern Info: for RadioCom 3.5 Transceiver control